SAFETY PRECAUTIONS

SERVICE WARNING

Only qualified service technicians who are familiar with safety checks and guidelines should perform service work. Before replacing parts, disconnect power source to protect electrostatically sensitive parts. Do not attempt to modify any circuit unless so recommended by the manufacturer. When servicing the receiver, use an isolation transformer between the line cord and power receptacle.

SERVICING THE HIGH VOLTAGE AND CRT

Use EXTREME CAUTION when servicing the high voltage circuits. To discharge static high voltage, connect a 10K ohms resistor in series with a test lead between the receiver ground and CRT anode lead. DO NOT lift the CRT by the neck. Always wear shatterproof goggles when handling the CRT to protect eyes in case of implosion.

X-RAY RADIATION AND HIGH VOLTAGE LIMITS

Be aware of the instructions and procedures covering X-ray radiation. In solid-state receivers and monitors, the CRT is the only potential source of X-rays. Keep an accurate high voltage meter available at all times. Check meter calibration periodically. Whenever servicing a receiver, check the high voltage at various brightness levels to be sure it is regulating properly. Keep high voltage at rated value, NO HIGHER. Excessive high voltage may cause X-ray radiation or failure of associated components. DO NOT depend on protection circuits to keep voltage at rated value. When troubleshooting a receiver with excessive high voltage, avoid close contact with the CRT. DO NOT operate the receiver longer than necessary. To locate the cause of excessive high voltage, use a variable AC transformer to regulate voltage. In present receivers, many electrical and mechanical components have safety related characteristics which are not detectable by visual inspection. Such components are identified by a # on both the schematic and the parts list. For SAFETY, use only equivalent replacement parts when replacing these components.

GENERAL GUIDELINES

Perform a final SAFETY CHECK before returning receiver to customer. Check repaired area for poorly soldered connections, and check entire circuit board for solder splashes. Check board wiring for pinched wires or wires contacting any high wattage resistors. Check that all control knobs, shields, covers, grounds, and mounting hardware have been replaced. Be sure to replace all insulators and restore proper lead dress.

SAFETY CHECKS -- FIRE AND SHOCK HAZARD

Cold Leakage Checks for Receivers with Isolated Ground

Unplug the AC cord, connect a jumper across the plug prongs, and turn the power switch on (if applicable). Use an ohmmeter to measure the resistance between the jumped AC plug and any exposed metal cabinet parts such as antenna screw heads, control shafts, or handle brackets. Exposed metal parts with a return path should measure between 1M ohms and 5.2M ohms. Parts without a return path must measure infinity.

Hot Leakage Current Check

Plug the AC cord directly into an AC outlet. DO NOT use an isolation transformer. Use a 1500 ohms, 10W resistor in parallel with a .15µF capacitor to connect between any exposed metal parts on the receiver and a good earth ground. (See figure below.) Use an AC voltmeter with at least 5000 ohms per volt sensitivity to measure the voltage across the resistor. Check all exposed metal parts and measure voltage at each point. Voltage measurements should not exceed .75VAC, 500µA. Any value exceeding this limit constitutes a potential shock hazard and must be corrected. If the AC plug is not polarized, reverse the AC plug and repeat exposed metal part voltage measurement at each point.

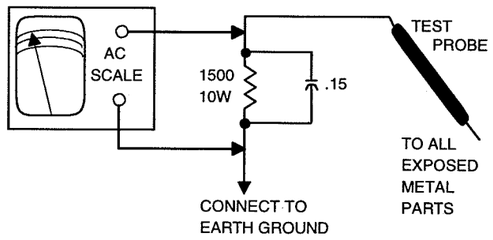

HIGH VOLTAGE SHUTDOWN TEST

Apply 120VAC and turn receiver on. Set all digital customer controls for normal operation. Momentarily short test point X to test point R. Receiver should lose raster and sound. If the receiver does not lose raster and sound, the shutdown circuit should be repaired. To resume normal operation, remove AC power and wait 30 seconds. After restoring AC power, the receiver should power up automatically.

The listing of any available replacement part herein in no case constitutes a recommendation, warranty, or guarantee by SAMS Technical Publishing as to the quality and suitability of such replacement part. The numbers of the listed parts have been compiled from information furnished to SAMS Technical Publishing by the manufacturers of the specific type of replacement part listed.

Reproduction or use, without express permission, of editorial or pictorial content, in any manner, is prohibited. No patent liability is assumed with respect to the use of the information contained herein.

© 2000 SAMS Technical Publishing

5436 West 78th Street
Indianapolis, IN 46268 - 4149

Printed in the United States of America 5 4 3 2 1

00PD01706

0 81262 04351 6

4351

PHOTOFACT® Technical Service Data

4351

SET 4351

MODELS CN27V71, CN32V71 (CHASSIS N9S)

TOSHIBA

INDEX

High Voltage Shutdown Test 1
IC Functions 4
Important Parts Information 4
Miscellaneous Adjustments 1
Parts List 4
Placement Chart 1
Safety Precautions 1
Schematic Component Location 3
Schematic Notes 2
Schematics
- A/V Switching 3
- CRT 2
- PIP Control 3
- Power Supply 2
- System Control 3
- Television 2
- Velocity Modulator 2

Test Equipment 4
Tuner Information 1

For Supplier Address, See PHOTOFACT Annual Index

TOSHIBA

Models CN27V71, CN32V71 (Chassis N9S)

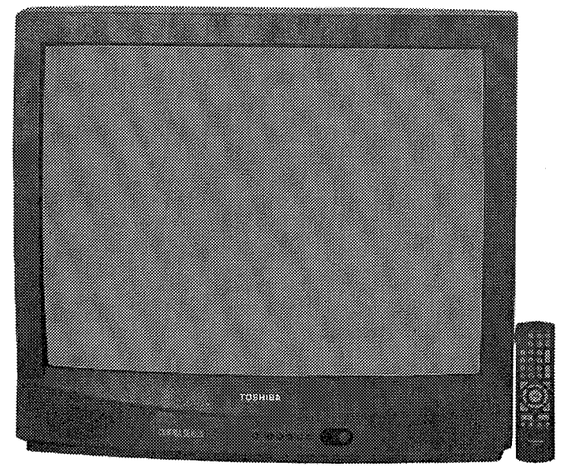

Model CN32V71

Essential coverage for servicing a television receiver...

- **Schematics**
- **Component locations**
- **Parts list**

SAMS™ Technical Publishing

OCTOBER 2000 SET 4351

4351

TUNER INFORMATION

H001 MAIN TUNER VOLTAGE CHART

Pin	VHF Low Band	VHF High Band	UHF Band	Pin	VHF Low Band	VHF High Band	UHF Band
1 (AGC)	1.7V	1.7V	1.6V	9 (+32V)	32.7V	32.7V	32.7V
3 (A)	4.6V	4.6V	4.6V	11 (IF)	0V	0V	0V
4 (SCL)	4.4V	4.4V	4.4V				
5 (SDA)	4.3V	4.3V	4.3V				
6 (MB)	0V	0V	0V				
7 (+5V)	5.0V	5.0V	5.0V				

NOTE: VHF Low Band voltages taken on channel 2.
VHF High Band voltages taken on channel 7.
UHF Band voltages taken on channel 14.

H001 MAIN TUNER TERMINAL GUIDE

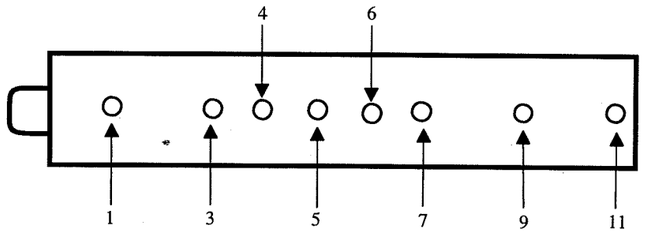

HY01 PIP TUNER VOLTAGE CHART

Pin	VHF Low Band	VHF High Band	UHF Band	Pin	VHF Low Band	VHF High Band	UHF Band
1 (NC)	0V	0V	0V	10 (A OUT)	0V	0V	0V
2 (+32V)	32.7V	32.7V	32.7V	11 (GND)	0V	0V	0V
3 (SCL)	4.4V	4.4V	4.4V	12 (AFT)	1.8V	1.8V	2.0V
4 (SDA)	4.3V	4.3V	4.3V	13 (NC)	0V	0V	0V
5 (NC)	0V	0V	0V	14 (GND)	0V	0V	0V
6 (ADS)	0V	0V	0V	15 (V OUT)	4.4V	4.4V	4.4V
7 (+5V)	5.0V	5.0V	5.0V				
8 (AGC)	3.4V	3.6V	3.2V				
9 (9V)	8.7V	8.7V	8.7V				

NOTE: VHF Low Band voltages taken on channel 2.
VHF High Band voltages taken on channel 7.
UHF Band voltages taken on channel 14.

HY01 PIP TUNER TERMINAL GUIDE

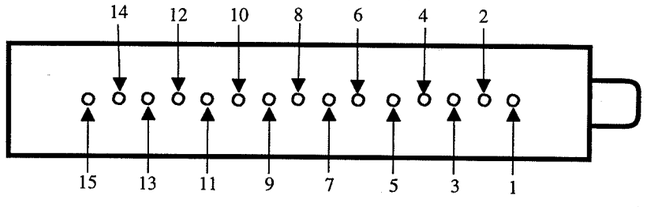

MISCELLANEOUS ADJUSTMENTS

HIGH VOLTAGE CHECK

Tune in a picture. Set brightness, contrast, and color to minimum. Connect a high voltage probe to the CRT anode. High voltage should read 30kV to 32kV.

ENTERING THE SERVICE AND DESIGN MODES

To enter the service mode, press the mute button on the remote. Press the mute button again and keep pressing while simultaneously pressing the menu button on the receiver. The letter S will appear on the screen indicating that the receiver is in the service mode.

To enter the design mode, enter the service mode and press and hold the recall button while simultaneously pressing the menu button on the receiver. The letter D will appear on the screen indicating that the receiver is in the design mode.

When in the service mode or design mode, press the menu button on the receiver to display the adjustment menu. To select the item to be adjusted, press the channel up or down button. To adjust the reference value, press the volume up or down button. To exit from the service mode or the design mode, press the power button to turn off the receiver.

TEST SIGNAL SELECTION

Enter the service mode. Press the menu button on the receiver to display the adjustment menu. Press the TV/video button on the remote to display the built-in test patterns in the following order:

Normal picture, red raster, green raster, blue raster, black screen, white screen, black screen with white window, black crossbar, white crossbar, black crosshatch, white crosshatch, black crossdot, white crossdot, and back to normal picture.

NOTE: If a video cable is connected to the video input jack, the built-in test patterns will not be displayed on the screen.

SELF DIAGNOSTIC FUNCTION

Enter the service mode. Press the 9 button on the remote to check for proper execution of IC interfacing. The following is an explanation of what is displayed on screen:

Display	Explanation
[SELF CHECK]	Self diagnostic function.
No. 23906949	Part number of QA01.
POWER : 0	Operation number of protecting circuit. 000 display is normal.
BUS LINE : OK	BUS line check. OK is normal. NG indicates a short to ground of the SCL or SDA signal or a short between SCL and SDA.
BUS CONT : OK	Bus line acknowledge check. OK is normal. A location number is NG. NG QA02 indicates QA02 is bad.
BLOCK : UV V1 V2 V4 QV01 QV01S	Green display is normal. Cyan display is no check. Red display is NG. UV is TV mode, V1 is Video 1 mode, and V2 is Video 2 mode.

INITIALIZATION OF QA02

NOTE: QA02 must be initialized after replacement.

Enter the service mode. Press and hold the recall button on the remote while simultaneously pressing the channel up button on the receiver. The initialization of QA02 is complete. Program channels into memory.

ITEM BUTTONS

The following is a list of the buttons on the remote that will go to an item or perform a different function of the service mode:

1	RCUT	5	COLC
2	GCUT	6	TNTC
3	BCUT	8	Toggles audio test signal on and off.
4	SCNT	9	Self diagnostics

SUB COLOR (COLC) & SUB TINT (TNTC)

Tune in a color bar pattern. Set contrast to maximum and brightness to midrange. Connect an oscilloscope to the red cathode. Enter the service mode. Select item COLC and adjust reference value to obtain 150Vp-p. Tune in an active channel. Select item TNTC and adjust reference value for proper flesh tones.

SUB BRIGHTNESS (BRTC)

Tune in a picture. Set contrast to minimum. Enter the service mode. Select item BRTC, adjust reference value until vertical retrace line just disappears. Adjust contrast for normal picture. Perform Height (HIT) adjustment.

HORIZONTAL POSITION (HPOS) & VERTICAL POSITION (VPOS)

Enter the service mode. Press the TV/video button on remote until a crossbar pattern is displayed. Select item HPOS or VPOS and adjust reference value for the horizontal and vertical position alternately until the pattern is centered on the screen. Check the position of the picture with off-air signal.

HEIGHT (HIT)

Enter the service mode. Press the TV/video button on remote until a crosshatch pattern is displayed. Select item HIT and adjust reference value for slight underscan. Advance the data value by 8 steps and check the vertical position of the picture.

WIDTH (WID)

Enter the service mode. Press the TV/video button on remote until a crosshatch pattern is displayed. Select item WID, adjust reference value for slight underscan. Advance the reference value by 7 steps. Check for proper horizontal position of the picture.

E-W PARABOLA (DPC)

Enter the service mode. Press the TV/video button on remote until a crosshatch pattern is displayed. Select item DPC, adjust reference value for straight vertical lines on both sides of the pattern.

WHITE BALANCE (RCUT, GCUT, BCUT, GDRV, BDRV)

Turn receiver on. Allow a 10 to 30 minute warm up time. Adjust contrast to center and brightness to maximum. Enter the service mode. Press the TV/video button on remote until the white screen pattern is displayed. Select items RCUT, GCUT, BCUT, GDRV, and BDRV and set the reference value for each to 40H. Press the video button on the remote to obtain a single horizontal line. Advance the screen control until a faint line of one predominant color appears on the screen. Adjust the other two cutoff items to obtain a dim white line. Press the video button on the remote to get full deflection. Select items GDRV and BDRV and adjust reference value of each for the best black and white picture on screen.

COLOR PURITY / CONVERGENCE

The yoke is bonded to the CRT. Color purity and convergence adjustments are not recommended.

MISCELLANEOUS ADJUSTMENTS continued

STEREO ADJUSTMENTS

Enter the service mode.

Attenuator (ATT)

Select item ATT. Input a 1kHz, 30% modulated signal. Connect a RMS meter to pin 12 of H002. Adjust reference value to obtain a reading of 130mVrms.

Stereo VCO (STVC)

Select item STVC. Connect a frequency counter to pin 12 of H002 and connect pin 9 to ground. Adjust reference value to obtain a reading of 62.936kHz.

SAP VCO (SAVC)

Select item SAVC. Input 78.67kHz, 147mVrms to pin 9 of H002. Input a mono signal. Adjust reference value for a reading in the center of the range for STA7=0 and STA8=1.

Stereo Filter (STRF)

Select item STRF. Input 9.4kHz, 600mVrms to pin 9 of H002. Input a mono signal. Adjust reference value for a reading in the center of the range for STA3=1.

SAP Filter (SAPF)

Select item SAPF. Input 88kHz, 110mVrms to pin 9 of H002. Input a mono signal. Adjust reference value for a reading in the center of the range for STA4=1.

Stereo Separation (WBAN) & Spectral (SPEC)

Select item WBAN. Input 300Hz, right channel signal. Select stereo mode on receiver. Connect an oscilloscope to pin 14 of H002. Adjust reference value for minimum amplitude of waveform. Select item SPEC. Input 3kHz, right channel signal. Adjust reference value for minimum amplitude of waveform.

Audio Test Signal

Enter the service mode. Press the 8 button on remote transmitter to toggle the audio test signal (1kHz) on and off.

SERVICE MODE ADJUSTMENT CHART

Item	Adjustment Name	Direct Button	Reference Value	On-set Value
RCUT	Red Cutoff	1	40H	7CH
GCUT	Green Cutoff	2	40H	71H
BCUT	Blue Cutoff	3	40H	34H
GDRV	Green Drive	-	40H	3DH
BDRV	Blue Drive	-	40H	52H
SCNT	Sub Contrast	4	08H	0AH
BRTC	Sub Brightness	-	40H	3FH
COLC	Sub Color	5	40H	3AH
TNTC	Sub Tint	6	40H	47H
HPOS	Horizontal Position	-	16H	1CH
VPOS	Vertical Position	-	03H	03H
HIT	Height	-	1EH	22H
LIN	Vertical Linearity	-	06H	08H
VSC	Vertical S Correction	-	04H	04H
VPS	Vertical Shift	-	1BH	1BH
VCP	Vertical Compensation	-	03H	03H
WID	Width	-	18H	1CH
DPC	E-W Parabola	-	0AH	0CH
CNR	E-W Corner	-	07H	07H
TRAP	Trapezium	-	09H	08H
HCP	Horizontal Compensation	-	00H	00H
VFC	Vertical F Correction	-	0FH	0FH
DAC	-	-	03H	03H
SAVC	SAP VCO	-	88H	07H
ATT	Attenuator	-	08H	07H
STVC	Stereo VCO	-	1CH	18H
SAPF	SAP Filter	-	88H	09H
STRF	Stereo Filter	-	16H	17H
SPEC	Spectral	-	30H	31H
WBAN	Stereo Separation	-	22H	19H
PHUE	PIP Tint	-	40H	40H
PCNT	-	-	16H	16H
PCOL	PIP Color	-	19H	19H
PYOF	-	-	07H	07H
PIOF	-	-	1DH	1FH
PQOF	-	-	1DH	1BH

DESIGN MODE ADJUSTMENT CHART

Item	Adjustment Name	Direct Button	Reference Value	On-set Value
CNTC	Contrast Center	-	-	20H
CNTN	Contrast Minimum	-	-	06H
BRTX	Brightness Maximum	-	-	17H
BRTN	Brightness Minimum	-	-	17H
COLX	Color Maximum	-	-	60H
COLN	Color Minimum	-	-	04H
TNTX	Tint Maximum	-	-	1BH
TNTN	Tint Minimum	-	-	1BH
SHPT	RF Sharpness Center	-	-	26H
SHPV	Video Sharpness Center	-	-	22H
SHPS	-	-	-	22H
ABL	-	-	-	03H
OABL	-	-	-	28H
DABL	-	-	-	03H
DOAB	-	-	-	28H
BSP	-	-	-	0CH
OBSP	-	-	-	04H
DBSP	-	-	-	14H
DOBP	-	-	-	04H
COLM	-	-	-	05H
OCLM	-	-	-	05H
DCLM	-	-	-	02H
DOCM	-	-	-	02H
TOF	-	-	-	81H
TEST	-	-	-	00H
CNTX	-	-	-	3FH
OSCT	-	-	-	08H
DSCT	-	-	-	FDH
DOCT	-	-	-	07H
MWCT	-	-	-	00H
OSBR	-	-	-	00H
DSBR	-	-	-	00H
DOBR	-	-	-	00H
OSCL	-	-	-	F7H
DSCL	-	-	-	0AH
DOCL	-	-	-	02H
OSTT	-	-	-	00H
DSTT	-	-	-	00H
DOTT	-	-	-	00H
SHPX	-	-	-	17H
SHPN	-	-	-	17H
OSPT	-	-	-	00H
OSPV	-	-	-	00H
OSPS	-	-	-	00H
SHPD	-	-	-	20H
DOSP	-	-	-	00H
RGBB	-	-	-	08H
ORGB	-	-	-	00H
MWBR	-	-	-	00H
OMWB	-	-	-	00H
OMRC	-	-	-	00H
OTRC	-	-	-	00H
DSRC	-	-	-	00H
DMRC	-	-	-	00H
DTRC	-	-	-	00H
MSRC	-	-	-	00H
MMRC	-	-	-	00H
MTRC	-	-	-	00H
OMGC	-	-	-	06H
OTGC	-	-	-	08H
DSGC	-	-	-	06H
DMGC	-	-	-	0CH

Item	Adjustment Name	Direct Button	Reference Value	On-set Value
DTGC	-	-	-	0EH
MSGC	-	-	-	0FH
MMGC	-	-	-	15H
MTGC	-	-	-	17H
OMBC	-	-	-	04H
OTBC	-	-	-	07H
DSBC	-	-	-	03H
DMBC	-	-	-	07H
DTBC	-	-	-	0AH
MSBC	-	-	-	04H
MMBC	-	-	-	08H
MTBC	-	-	-	0BH
OMGD	-	-	-	F6H
OTGD	-	-	-	EFH
DSGD	-	-	-	00H
DMGD	-	-	-	F6H
DTGD	-	-	-	EFH
MSGD	-	-	-	ECH
MMGD	-	-	-	E3H
MTGD	-	-	-	DBH
OMBD	-	-	-	F0H
OTBD	-	-	-	E2H
DSBD	-	-	-	00H
DMBD	-	-	-	F0H
DTBD	-	-	-	E2H
MSBD	-	-	-	05H
MMBD	-	-	-	F5H
MTBD	-	-	-	E7H
DTTX	-	-	-	57H
DTTC	-	-	-	48H
DTTN	-	-	-	39H
VBKS	-	-	-	1FH
VBKP	-	-	-	1FH
VRTC	-	-	-	30H
9DHI	-	-	-	00H
6DHI	-	-	-	00H
9DWD	-	-	-	00H
6DWD	-	-	-	00H
BASC	-	-	-	06H
TREC	-	-	-	06H
WON1	-	-	-	4CH
EBAS	-	-	-	00H
ETRE	-	-	-	02H
PRVL	-	-	-	0AH
SBSC	-	-	-	50H
PWR	-	-	-	00H
BUS	-	-	-	00H
MEM	-	-	-	00H
OPT0	Option 0	-	00H	00H
OPT1	Option 1	-	00H	00H
PHS	-	-	-	ECH
PDA1	-	-	-	80H
PDA2	-	-	-	41H
PDA3	-	-	-	20H
PCTO	-	-	-	F6H
SYNN	-	-	-	1CH
SYNX	-	-	-	26H
SYCN	-	-	-	18H
SYCX	-	-	-	29H
SYCT	-	-	-	07H
OSD	OSD Horizontal Position	-	-	16H

PLACEMENT CHART

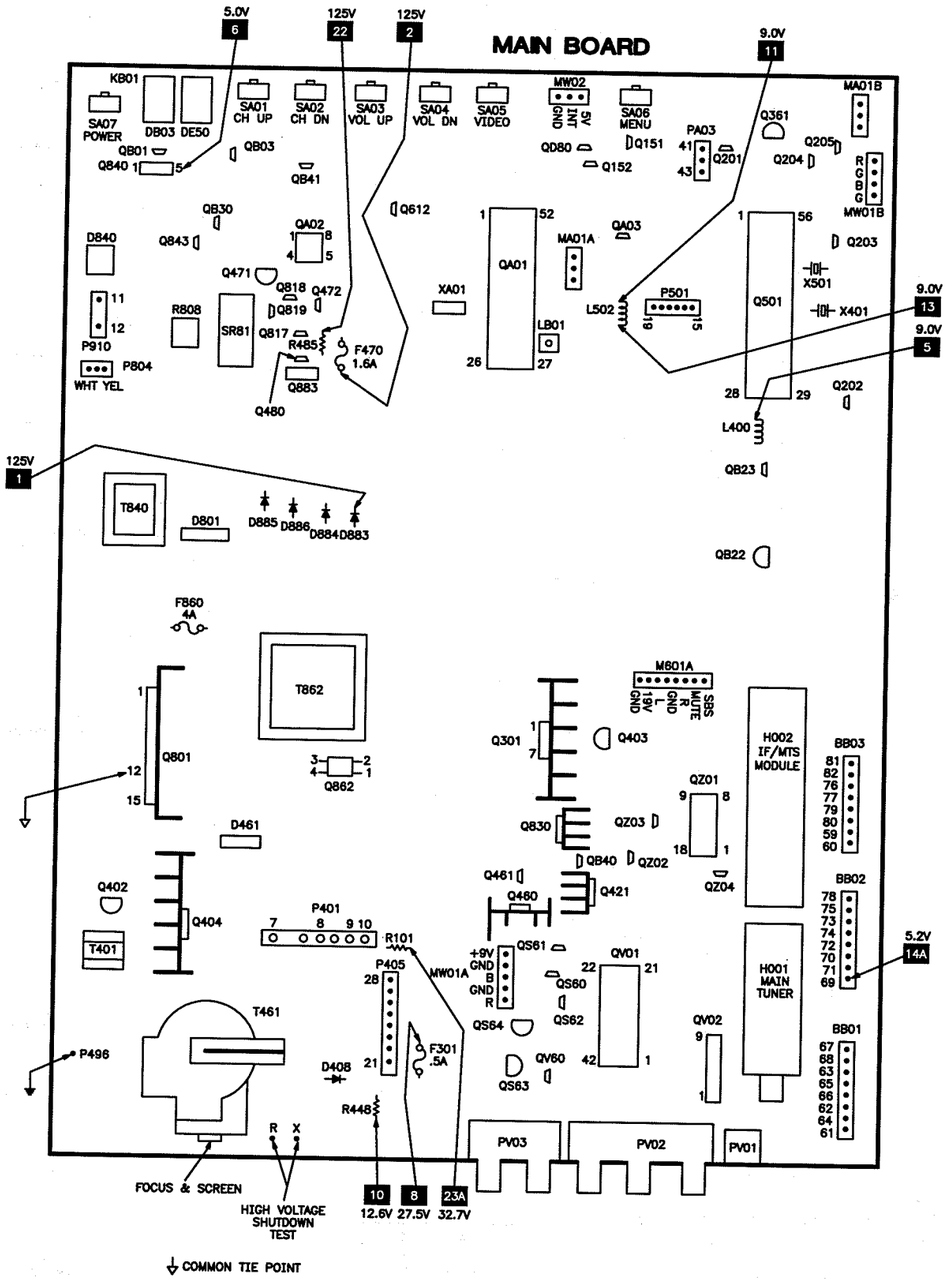

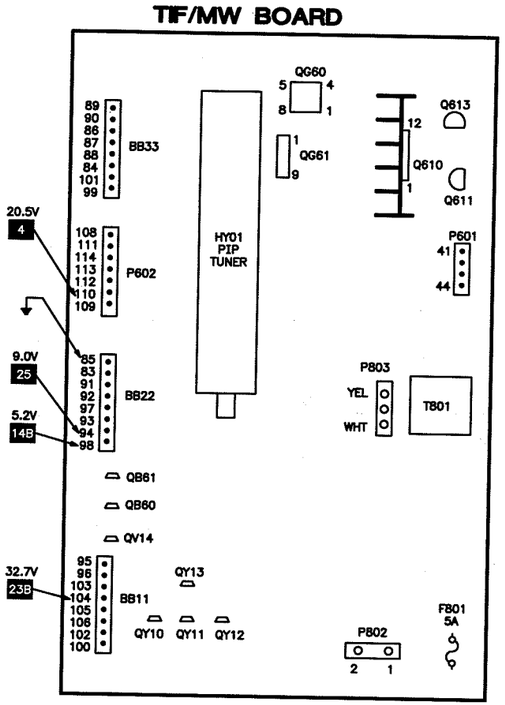

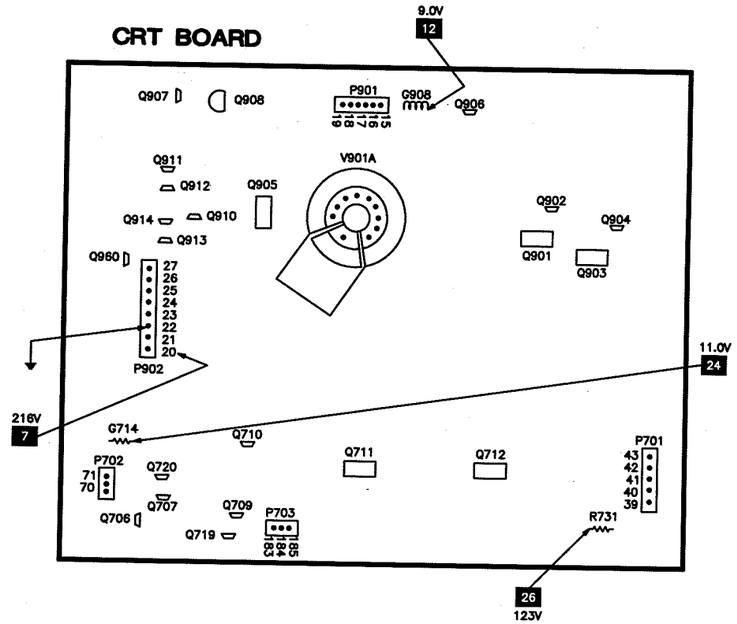

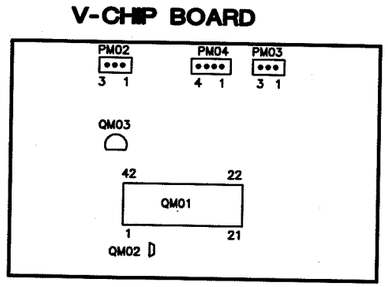

TOSHIBA

MODELS CN27V71, CN32V71 (CHASSIS N9S)

TELEVISION SCHEMATIC

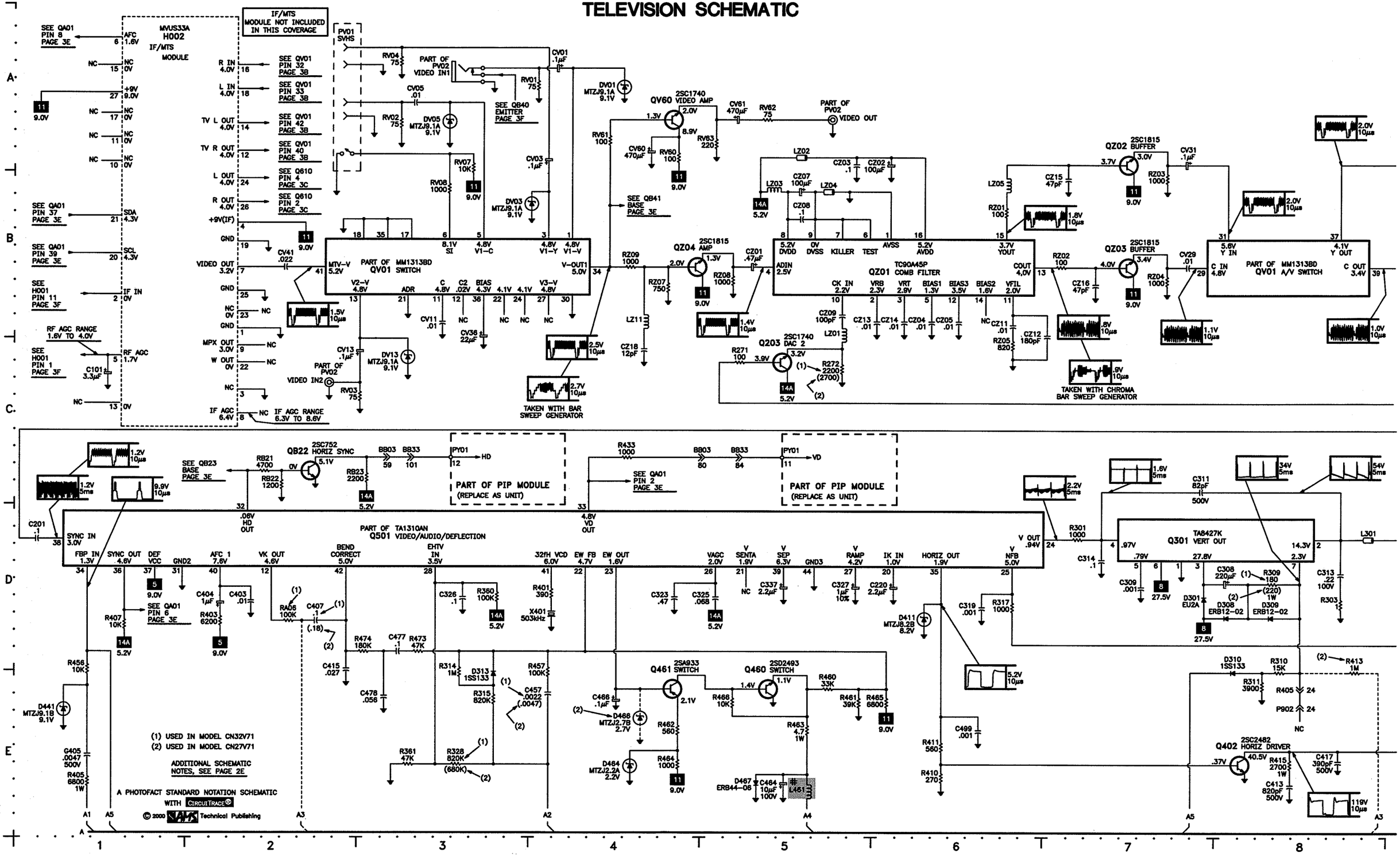

TELEVISION SCHEMATIC continued

C D

PART OF PIP MODULE (REPLACE AS UNIT)

Q501 PART OF TA1310AN VIDEO/AUDIO/DEFLECTION

Q202 2SC1740 Y AMP

Q361 2SC4721 REG

Q404 2SD2553 HORIZ OUT

Q902 2SC1740 RED DRIVE

Q906 2SC1740 BLUE DRIVE

Q904 2SC1740 GREEN DRIVE

Q910 2SC1740 AMP

Q907 2SA1015 AMP

Q911 2SC1740 AMP

Q912 2SA933 BUFFER

Q914 2SC1740 AMP

Q913 2SA933 BIAS

Q471 2SA1015 SWITCH

Q472 2SC1740 SWITCH

(1) USED IN MODEL CN32V71
(2) USED IN MODEL CN27V71

ADDITIONAL SCHEMATIC NOTES, SEE PAGE 2E

A PHOTOFACT STANDARD NOTATION SCHEMATIC WITH CIRCUITRACE®

© 2000 Technical Publishing

POWER SUPPLY SCHEMATIC

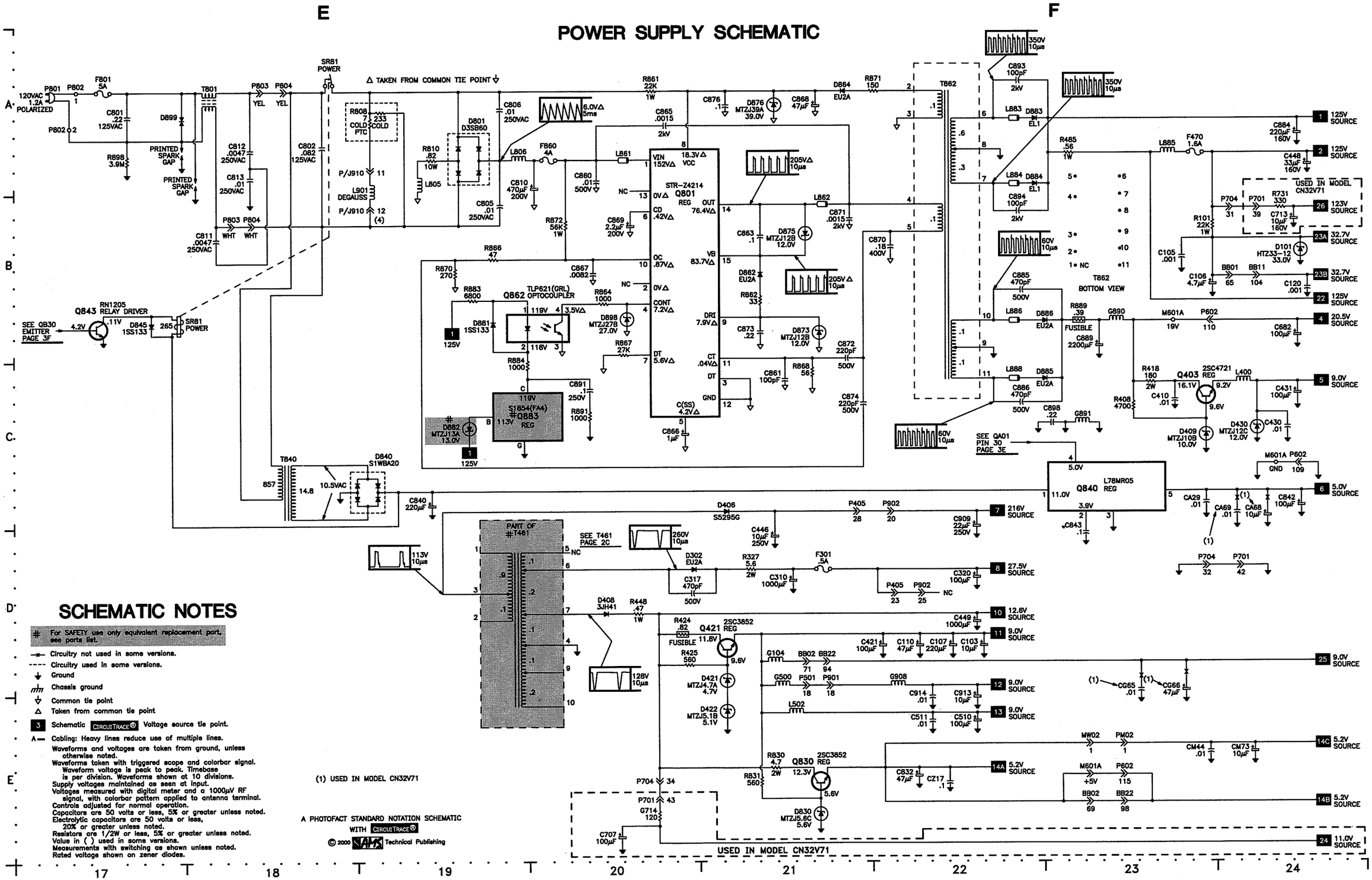

SCHEMATIC NOTES

For SAFETY use only equivalent replacement part, see parts list.

Circuitry not used in some versions.

Circuitry used in some versions.

Ground

Chassis ground

Common tie point

△ Taken from common tie point

3 Schematic CIRCUITRACE® Voltage source tie point.

A— Cabling: Heavy lines reduce use of multiple lines.

Waveforms and voltages are taken from ground, unless otherwise noted.

Waveforms taken with triggered scope and colorbar signal. Waveform voltage is peak to peak. Timebase is per division. Waveforms shown at 10 divisions.

Supply voltages maintained as seen at input.

Voltages measured with digital meter and a 1000µV RF signal, with colorbar pattern applied to antenna terminal.

Controls adjusted for normal operation.

Capacitors are 50 volts or less, 5% or greater unless noted.

Electrolytic capacitors are 50 volts or less, 20% or greater unless noted.

Resistors are 1/2W or less, 5% or greater unless noted.

Value in ( ) used in some versions.

Measurements with switching as shown unless noted.

Rated voltage shown on zener diodes.

(1) USED IN MODEL CN32V71

A PHOTOFACT STANDARD NOTATION SCHEMATIC WITH CIRCUITRACE®

© 2000 SAMS Technical Publishing

G
VELOCITY MODULATOR SCHEMATIC

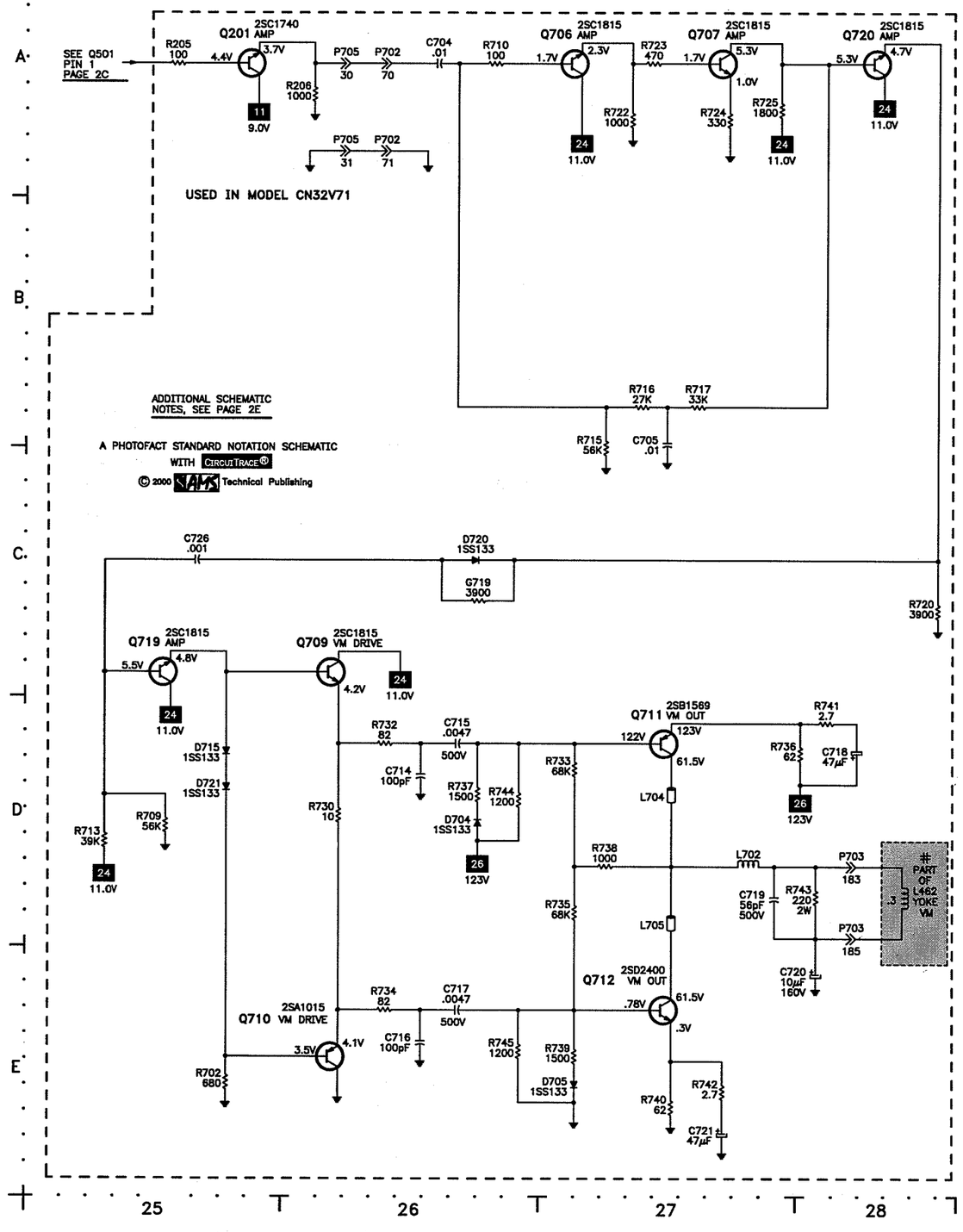

H
CRT SCHEMATIC

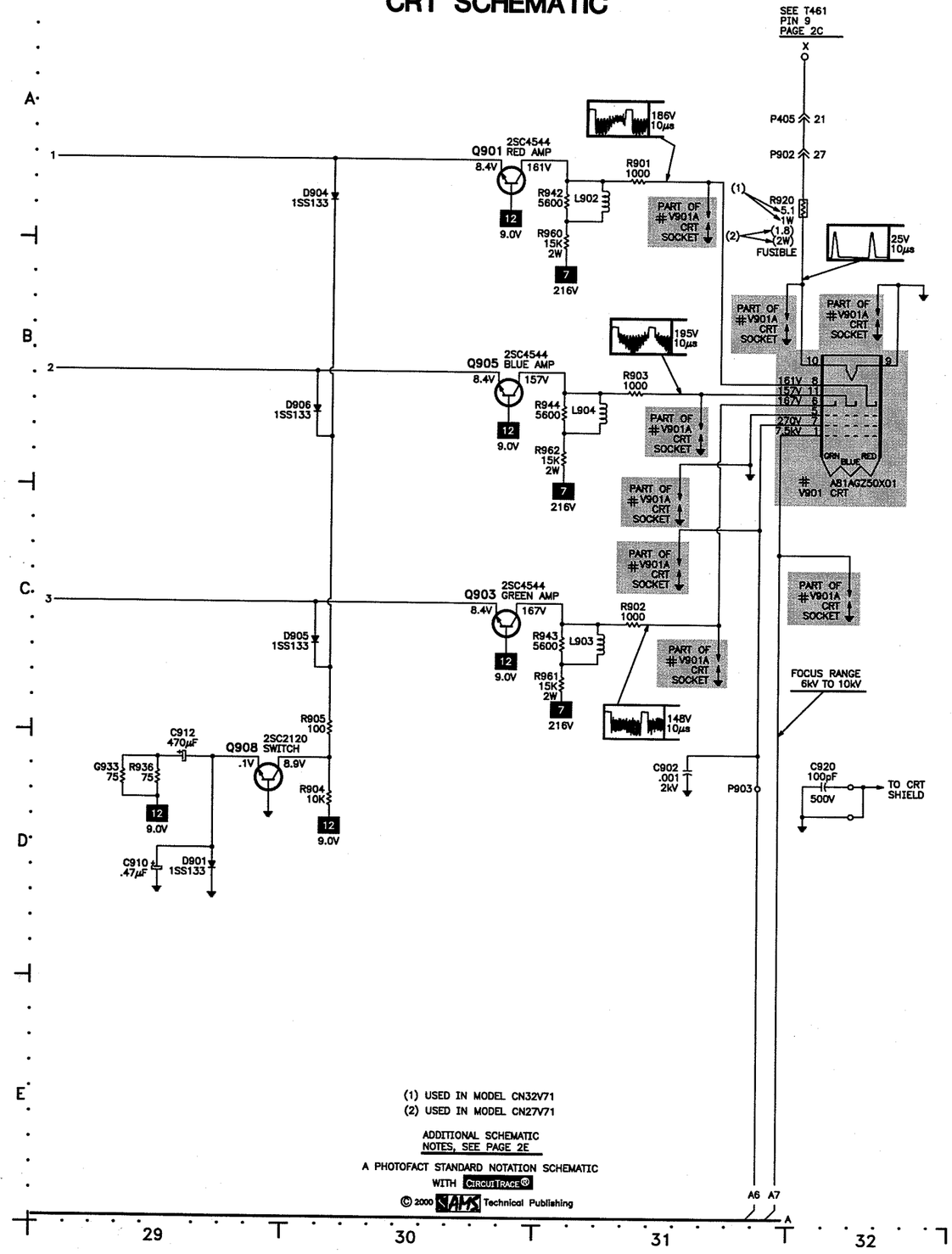

TOSHIBA MODELS CN27V71, CN32V71 (CHASSIS N9S)

A/V SWITCHING SCHEMATIC

A

B

ANT-1
ANT OUT
ANT-2
RSU133X5
H003
RF SWITCH
PA03 42
PA03 43
11 9.0V
SEE H001 ANT IN PAGE 3F
PA03 41
Q152 2SC1740 SWITCH 8.7V
Q151 2SA933 SWITCH
R151 5600
R152 10K
8.6V
0V
C150 10µF
SEE QA01 PIN 10 PAGE 3E
11 9.0V
SEE QA01 PIN 37 PAGE 3E
SEE QA01 PIN 39 PAGE 3E
BB01 62 (66)
BB11 106
BB01 66 (62)
BB11 105
L112
L111
PY01 13
PY01 14
SCL
SDA
RV20 100
PART OF PIP MODULE (REPLACE AS UNIT)
L113
C122 220µF
25 9.0V
NC 1 0V
NC 5 NC 0V
SDA 4.3V
SCL 4.4V
AGC 3.4V
ADS
NC 10 A OUT 0V
9V 8.7V
EL934L3 HY01 PIP TUNER
V OUT 4.4V 15
NC 0V 13
+32V 2
23B 32.7V
+5V 7
GND 11
GND 14
AFT 1.8V 12
14B 5.2V
SEE QA01 PIN 7 PAGE 3E
BB11 103
BB01 63
CV49 10µF
L114
C121 100µF
CV48 .01
CV46 100µF
LV45
CV45 .01
CV47 10µF
11 9.0V
DV45 MTZJ9.1A 9.1V
PART OF PV03 VIDEO
RW01 75
IN2 5.0V 7
GND 4
NC 8 0V
NC 1 0V
SW 4.7V 6
MM1111XS QV02 CONTROL
VCC 9.0V 2
1N1 5.0V 5
OUT 4.3V 3
CV07 .012
CV09 .1
PIP-TV 6.0V 7
DVD-Y 6.0V 9
MM1313BD PART OF QV01 A/V SWITCH
RY19 100
SCL 4.3V 19
SDA 4.2V 20
SEE H002 PIN 14 PAGE 2A
CS42 1µF
RS42 100
MTV-L 4.2V 42
CS52 .001
SEE H002 PIN 12 PAGE 2A
CS40 1µF
RS40 100
MTV-R 4.2V 40
CS51 .001
PART OF PV02 LEFT AUDIO IN2
CS14 2.2µF
RS14 6800
V2-L 4.2V 14
CS47 330pF
PART OF PV02 RIGHT AUDIO IN2
CS16 2.2µF
RS16 6800
V2-R 4.2V 16
CS48 330pF
PV03 LEFT AUDIO IN
CS08 2.2µF
RS08 6800
DVD-L 4.2V 8
CS45 330pF
PART OF PV03 RIGHT AUDIO IN
CS10 2.2µF
RS10 6800
DVD-R 4.2V 10
CS46 330pF
SEE QA01 PIN 13 PAGE 3E
PART OF PV02 LEFT AUDIO IN1
CS02 2.2µF
RS02 6800
V1-L 4.2V 2
CS43 330pF
PART OF PV02 RIGHT AUDIO IN1
CS04 2.2µF
RS04 6800
V1-R 4.2V 4
CS44 330pF
MUTE 0V 28
SEE QA01 PIN 43 PAGE 3E
SEE QM02 BASE PAGE 3D
PIP-V 4.2V 23
BB01 67
BB11 95
VCC 8.9V 38
CV38 470µF
CV39 .01
LV01
11 9.0V
RV17 100
QV14 2SA933 VIDEO AMP 4.9V 4.2V
RV18 680
25 9.0V
SEE QB60 BASE PAGE 3E
V3-L 4.2V 25 NC
V3-R 4.2V 26 NC
15
L OUT 4.1V 33
CS33 10µF
SEE H002 PIN 18 PAGE 2A
R OUT 4.1V 32
CS32 10µF
SEE H002 PIN 16 PAGE 2A
RS60 100 4.1V
QS60 2SC1740 AMP 3.5V
CS70 22µF
RS64 1000
RS61 2200
11 9.0V
PART OF PV02 LEFT AUDIO OUT
RS70 100K
2SC2878 QS63 MUTE
0V 0V
RS62 100 4.1V
QS61 2SC1740 AMP 3.5V
CS71 22µF
RS65 1000
RS63 2200
11 9.0V
PART OF PV02 RIGHT AUDIO OUT
RS71 100K
RS88 22K
2SC2878 QS64 MUTE
RS89 22K
0V 0V
R528 4700
RS86 1000
QS62 RN2204 MUTE .02V 0V

ADDITIONAL SCHEMATIC NOTES, SEE PAGE 2E

A PHOTOFACT STANDARD NOTATION SCHEMATIC WITH CIRCUITRACE®

© 2000 Technical Publishing

33 34 35 36 37 38 39 40

C
A/V SWITCHING SCHEMATIC continued

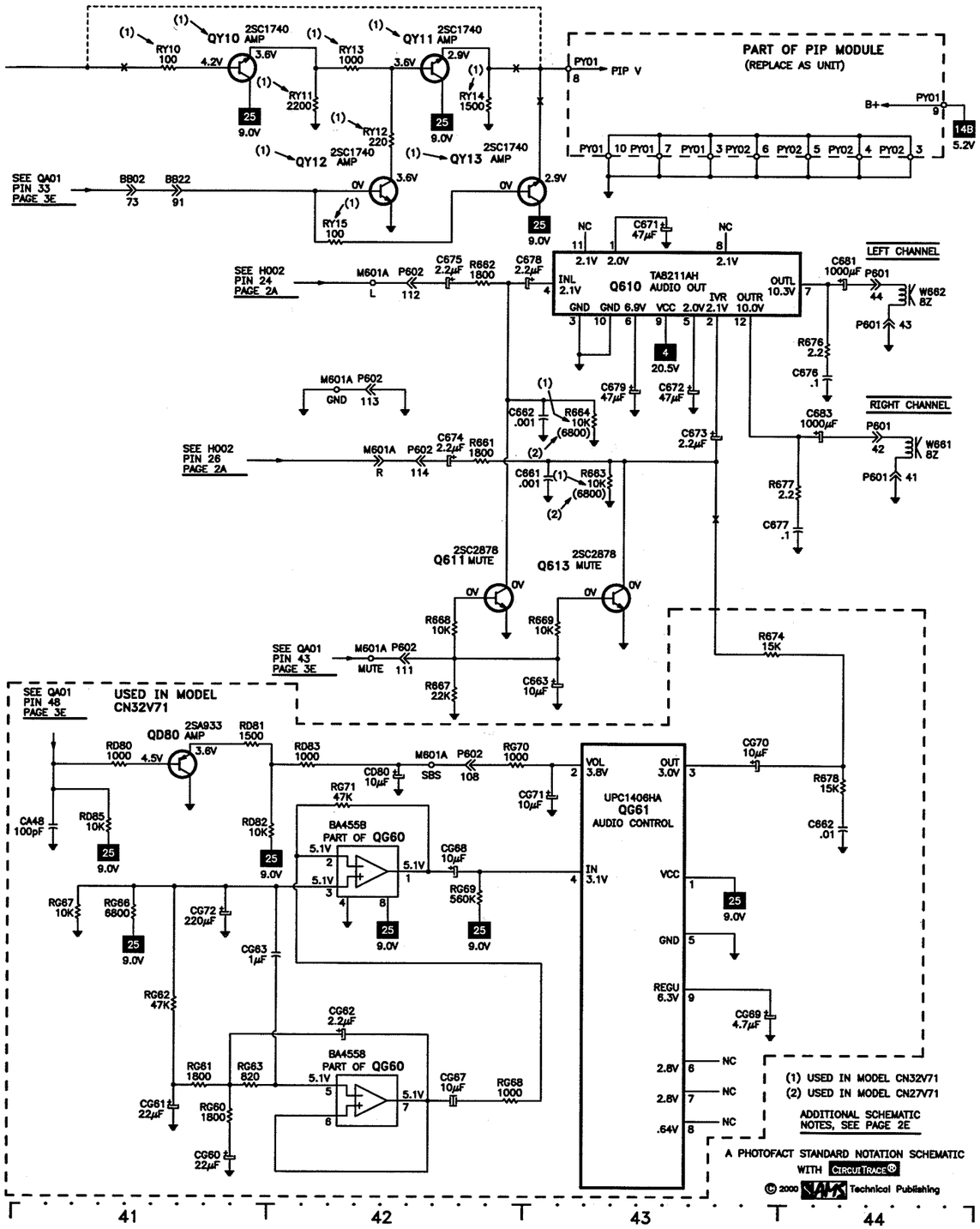

A PHOTOFACT STANDARD NOTATION SCHEMATIC WITH CIRCUITRACE®

© 2000 Technical Publishing

D
PIP CONTROL SCHEMATIC

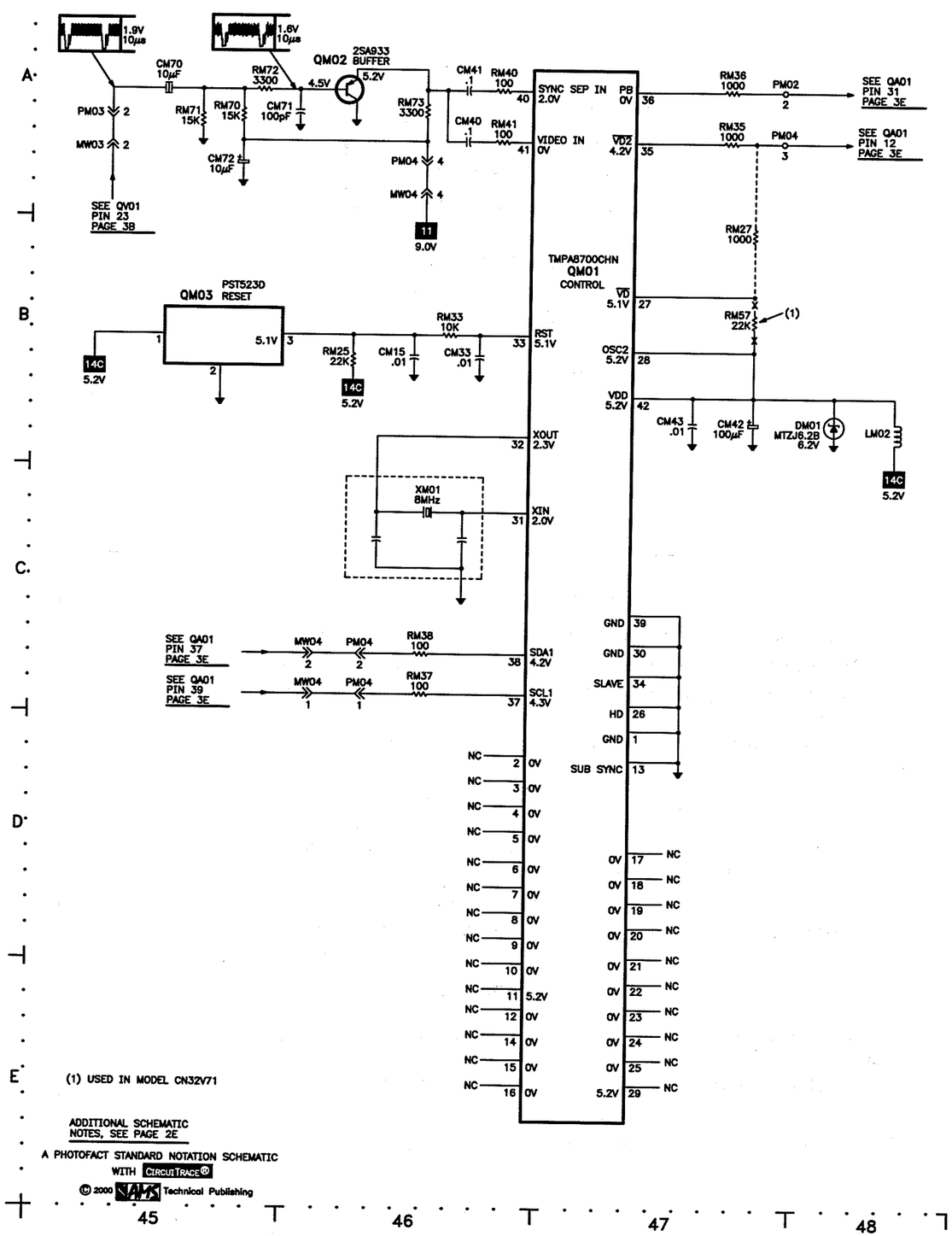

(1) USED IN MODEL CN32V71

ADDITIONAL SCHEMATIC NOTES, SEE PAGE 2E

A PHOTOFACT STANDARD NOTATION SCHEMATIC WITH CIRCUITRACE®

© 2000 Technical Publishing

SYSTEM CONTROL SCHEMATIC

E F

A B C D E

PIC-TB17
KB01 REMOTE RECEIVER
VCC GND

QA01 MICROPROCESSOR

RMT IN 4.9V
AVCC 5.0V
AFT2 3.7V
VCC 5.0V
KEY-A 5.0V
VHOLD .1V
KEY-B 5.0V
VSS
AFT1 3.9V
MAIN SYNC 4.6V
SUB SYNC 5.2V
RVCO 1.6V
VIDEO IN 2.1V
V SYNC 5.0V
CN VSS
HLF 1.6V
H SYNC 5.0V
OSC1 5.0V
XIN 2.0V
XOUT 2.3V
OSC2 5.0V

SDAO 4.3V
C-SPF 0V
SCLO 4.3V
SGA 1.0V
SCL1 5.0V
YM 0V
SDA1 5.0V
LED 5.0V
RF1/2 0V
0V
RMT OUT 0V
RST 5.0V
POWER 4.9V
AV SW 5.0V
AFC1 0V
NC
VCHIP 4.2V
PIP VD 4.2V
VCHIP 0V
MUTE 0V
SGV .02V
OSD R 0V
OSD G 0V
OSD B 0V
OSD YS 0V
SBS 4.5V
DC TR2 0V
DC TR1 4.4V
0V

SA07 POWER
SA06 MENU
SA05 VIDEO
SA04 VOL DN
SA03 VOL UP
SA02 CH DN
SA01 CH UP

QB41 2SC1740 AMP
QB60 2SA933 AMP
QB61 2SC1740 BUFFER
QB23 2SC1740 SWITCH
QB01 2SC1740 DRIVER
QB03 RN1205 DRIVER
QB40 2SC1740 SWITCH
QB30 2SC1740 SWITCH
Q480 2SA949 SWITCH
Q818 RN2201 SWITCH
Q817 2SC1740 SWITCH
Q819 2SC1815 SWITCH
Q204 RN1204 SWITCH
Q205 RN1204 SWITCH
Q612 2SA933 BIAS
QA03 2SC1740 SWITCH

AT24C04-10PC
QA02
MEMORY

ELA22LX2
H001
MAIN TUNER

ANT IN
IF 0V
AGC 1.7V
SDA 4.3V
SCL 4.4V
+5V
+32V
NC
NC
MB 0V

MAIN TUNER NOT INCLUDED IN THIS COVERAGE

PART OF PIP MODULE (REPLACE AS UNIT)
PIP RST
KVD
9V

DE50 POWER SCL003URC5F
DB01 POWER SCL003URC3FX
DB03 IR SIR-56SB3F
RED

LA01
LM18
CM18
LB01
L105
XA01 8MHz
DA27 MTZJ5.6B 5.6V
DA06 1SS133
D480 MTZJ36A
D611 1SS133
DB45 1SS133
DB30 1SS133
D612 1SS133

SEE HY01 PIN 4 PAGE 3A
SEE HY01 PIN 12 PAGE 3A
SEE HY01 PIN 3 PAGE 3A
SEE HO02 PIN 21 PAGE 2A
SEE HO02 PIN 20 PAGE 2A
SEE HO02 PIN 2 PAGE 2A
SEE HO02 PIN 5 PAGE 2A
SEE HO02 PIN 6 PAGE 2A
SEE HO03 PAGE 3A
SEE QM01 PIN 38 PAGE 3D
SEE QM01 PIN 37 PAGE 3D
SEE QM01 PIN 36 PAGE 3D
SEE QM01 PIN 35 PAGE 3D
SEE QV01 PIN 2 PAGE 3B
SEE QV01 PIN 1 PAGE 2A
SEE QV14 EMITTER PAGE 3B
SEE QV01 PIN 34 PAGE 2A
SEE QV02 PIN 6 PAGE 3A
SEE QY12 BASE PAGE 3C
SEE QQ80 BASE PAGE 3C
SEE QS62 EMITTER PAGE 3B
SEE Q501 PIN 36 PAGE 2A
SEE Q501 PIN 33 PAGE 2A
SEE Q501 PIN 32 PAGE 2A
SEE Q501 PIN 6 PAGE 2C
SEE Q501 PIN 29 PAGE 2C
SEE Q501 PIN 7 PAGE 2C
SEE Q501 PIN 8 PAGE 2C
SEE Q501 PIN 9 PAGE 2C
SEE Q501 PIN 10 PAGE 2C
SEE Q501 PIN 56 PAGE 2D
SEE Q152 BASE PAGE 3A
SEE Q840 PIN 4 PAGE 2F
SEE Q843 BASE PAGE 2E
SEE Q613 BASE PAGE 3C
SEE Q472 EMITTER PAGE 2D

(1) USED IN MODEL CN32V71

ADDITIONAL SCHEMATIC NOTES, SEE PAGE 2E

A PHOTOFACT STANDARD NOTATION SCHEMATIC WITH CIRCUITRACE®

© 2000 AMS Technical Publishing

49 50 51 52 53 54 55 56

SCHEMATIC COMPONENT LOCATION GUIDE

C101	C1	C457	E4	C863	B21	CG71	D43	CZ09	B5	D903	D14	L886	B22	Q719	C25	R152	B33	R456	E1	R740	E27	R988	D15	RB44	D52	RS65	E39
C103	D22	C463	E9	C865	A20	CG72	D41	CZ11	C6	D904	A30	L888	C22	Q720	A28	R201	B9	R457	E4	R741	D28	R989	D16	RB45	D53	RS66	E38
C104	B55	C464	E5	C866	C20	CM15	B46	CZ12	C6	D905	C30	L901	B19	Q801	B20	R202	B9	R460	E5	R742	E27	R990	D16	RB46	D52	RS68	E39
C105	B23	C466	E4	C867	B20	CM18	A51	CZ13	B5	D906	B30	L902	A31	Q817	C54	R203	C10	R461	E5	R743	D28	R991	D15	RB47	D49	RS69	E39
C106	B23	C467	E10	C868	A21	CM19	D51	CZ14	B6	D911	D13	L903	C31	Q818	C54	R205	A25	R462	E4	R744	D26	RA01	D51	RB48	D49	RS70	D40
C107	D22	C471	E13	C869	B20	CM33	B46	CZ15	B7	DA06	E56	L904	B31	Q819	C54	R206	A26	R463	E5	R745	E26	RA02	D50	RB49	D50	RS71	E40
C110	D22	C474	E14	C870	B22	CM40	A46	CZ16	B7	DA27	B51	L910	D15	Q830	E21	R207	A14	R464	E4	R808	A19	RA03	B51	RB60	C49	RV01	A4
C120	B24	C477	D3	C871	B21	CM41	A46	CZ17	E22	DB01	B54	LA01	B50	Q840	C23	R208	C14	R465	E6	R810	A19	RA04	E51	RB61	C49	RV02	A3
C121	B36	C478	E3	C872	C21	CM42	B47	CZ18	C4	DB03	C54	LB01	E50	Q843	B17	R209	B14	R466	E5	R816	C54	RA05	C51	RB62	C50	RV03	C2
C122	B35	C480	D53	C873	B21	CM43	B47	D101	B24	DB30	C53	LM02	B48	Q862	B19	R216	D13	R472	E13	R818	D54	RA06	C51	RB63	C50	RV04	A3
C150	B33	C481	C52	C874	C21	CM44	E23	D201	C13	DB45	D53	LM18	A51	Q883	C19	R223	B9	R473	D3	R819	C54	RA06	D2	RB64	C50	RV07	B3
C201	D1	C499	E6	C876	A21	CM60	D50	D221	C13	DE50	B53	LV01	A38	Q901	A30	R228	E13	R474	D2	R830	E21	RA07	B51	RB65	C51	RV08	B3
C204	C10	C501	B9	C884	A24	CM70	A45	D222	C13	DM01	B48	LV45	B36	Q902	A15	R238	E54	R475	E13	R831	E21	RA08	C51	RD80	D41	RV17	A38
C205	E55	C504	C12	C885	B22	CM71	A46	D223	A10	DV01	A4	LV98	A13	Q903	C30	R239	E55	R476	E13	R861	A20	RA09	B51	RD81	D41	RV18	A39
C207	A14	C505	C12	C886	C22	CM72	A45	D224	A10	DV03	B3	LV99	C13	Q904	C15	R240	E54	R477	E13	R862	B21	RA10	B52	RD82	D42	RV20	B34
C208	C14	C510	E22	C889	B23	CM73	E24	D252	B13	DV05	A3	LZ01	C5	Q905	B30	R241	E54	R478	E13	R864	B20	RA11	C52	RD83	D42	RV60	B4
C209	B14	C511	E22	C891	C20	CR01	B13	D253	B14	DV13	C3	LZ02	B5	Q906	B15	R245	C13	R481	E14	R866	B19	RA12	D53	RD85	D41	RV61	A4
C216	C13	C512	C12	C893	A22	CR02	B13	D301	D7	DV45	B36	LZ03	B5	Q907	D15	R261	B11	R482	E13	R867	C20	RA14	C53	RG02	B54	RV62	A5
C220	D6	C582	C13	C894	B22	CR03	B12	D302	D20	F301	D21	LZ04	B5	Q908	D29	R262	B11	R485	A23	R868	C21	RA15	A51	RG03	B54	RV63	A5
C221	B10	C583	C12	C898	C22	CS02	E37	D308	D7	F470	A23	LZ05	B6	Q910	D14	R263	B12	R486	D53	R870	B19	RA16	E52	RG60	E41	RW01	C36
C222	B10	C612	D54	C902	D31	CS04	E37	D309	D8	F801	A17	LZ11	B4	Q911	D15	R264	B11	R487	C52	R871	A21	RA17	B52	RG61	E41	RW02	C13
C223	B11	C613	D54	C904	B15	CS08	D37	D310	E8	F860	A20	P801	A17	Q912	D16	R265	B12	R488	C53	R872	B20	RA20	C51	RG62	E41	RW03	A14
C224	B10	C661	C43	C905	C15	CS10	E37	D313	E3	G060	B55	PV02	A3	Q913	D16	R266	B12	R489	D53	R883	B19	RA22	D50	RG63	E41	RY10	A41
C225	B13	C662	B43	C907	C15	CS14	D36	D316	C12	G104	D21	PV02	A5	Q914	D16	R271	C5	R490	C53	R884	C19	RA23	D50	RG66	D41	RY11	A42
C226	C13	C662	D44	C909	D22	CS16	D37	D406	C21	G217	E13	PV02	C2	QA01	A52	R272	C5	R501	C12	R889	B23	RA30	C53	RG67	D41	RY12	A42
C245	C13	C663	C43	C910	D29	CS32	C38	D408	D20	G317	C12	PV02	D36	QA02	B54	R275	E53	R502	C11	R891	C20	RA31	D53	RG68	E42	RY13	A42
C261	B11	C671	B43	C911	D14	CS33	B38	D409	C23	G405	E1	PV02	D36	QA03	E55	R301	D7	R503	C11	R898	A17	RA32	B53	RG69	D42	RY14	A42
C262	B12	C672	B43	C912	D29	CS40	C37	D411	D6	G463	E10	PV02	D40	QB01	B53	R303	D8	R511	B9	R901	A31	RA33	A52	RG70	D42	RY15	B42
C263	B12	C673	B43	C913	E22	CS42	C37	D421	D21	G500	E21	PV02	E36	QB03	C53	R304	D9	R512	B9	R902	C31	RA37	A53	RG71	D42	RY19	C36
C305	D9	C674	C42	C914	E22	CS43	E37	D422	E21	G714	E20	PV02	E36	QB22	C2	R305	E9	R528	E38	R903	B31	RA39	A53	RM19	D50	RZ01	B6
C306	E9	C675	B42	C920	D32	CS44	E37	D430	C24	G719	C26	PV02	E40	QB23	D49	R306	D9	R612	D54	R904	D30	RA40	B52	RM25	B46	RZ02	B7
C307	D9	C676	B44	C921	D15	CS45	D37	D441	E1	G890	B23	PV03	A14	QB30	C55	R307	D9	R613	D54	R905	D30	RA42	E53	RM27	B47	RZ03	B7
C308	D7	C677	C44	C922	D15	CS46	E37	D461	E10	G891	C23	PV03	C13	QB40	D53	R308	E11	R614	D54	R911	D13	RA43	D52	RM33	B46	RZ04	B7
C309	D7	C678	B42	CA05	C51	CS47	D37	D464	E4	G908	E22	PV03	C35	QB41	D49	R309	D8	R661	C42	R914	A15	RA44	C52	RM35	A47	RZ05	C6
C310	D21	C679	B43	CA06	C51	CS48	D37	D466	E4	G916	B15	PV03	D36	QB60	C50	R310	E8	R662	B42	R915	B15	RA46	E52	RM36	A47	RZ07	B4
C311	D7	C681	B44	CA12	D52	CS51	C37	D467	E5	G933	D29	PV03	E36	QB61	C50	R311	E8	R663	C43	R917	B15	RA47	D54	RM37	D46	RZ08	B5
C313	D8	C682	B24	CA21	B51	CS52	C37	D471	E13	G945	B15	Q151	B33	QD80	D41	R313	D9	R664	B43	R918	B15	RA49	E56	RM38	C46	RZ09	B4
C314	D7	C683	C44	CA22	D50	CS70	D38	D472	E14	G946	C15	Q152	B33	QG60	D42	R314	E3	R667	C42	R920	A31	RA50	E55	RM40	A46	SA01	B50
C317	D20	C704	A26	CA27	B51	CS71	E38	D473	E15	H001	C55	Q201	A25	QG60	E42	R315	E3	R668	C42	R921	C15	RA51	A12	RM41	A46	SA02	B49
C319	D6	C705	C27	CA28	B50	CV01	A4	D480	C53	H002	A1	Q202	B9	QG61	D43	R317	D6	R669	C43	R922	C15	RA52	A11	RM57	B47	SA03	B49
C320	D22	C707	E20	CA29	C23	CV03	B4	D611	D53	H003	A33	Q203	C5	QM01	B47	R327	D21	R674	C43	R924	C15	RA61	B54	RM70	A45	SA04	B49
C323	D4	C713	B24	CA30	C52	CV05	A3	D612	E54	HY01	B35	Q204	E53	QM02	A46	R328	E3	R676	B44	R925	C15	RA62	B52	RM71	A45	SA05	B49
C325	D5	C714	D26	CA37	A53	CV07	A37	D704	D26	KB01	A49	Q205	E54	QM03	B45	R336	D9	R677	C44	R928	B15	RA67	A54	RM72	A45	SA06	B49
C326	D3	C715	D26	CA39	A53	CV09	C37	D705	E27	L105	B55	Q301	D7	QS60	D38	R360	D3	R678	D44	R929	B15	RA68	A54	RM73	A46	SA07	B50
C327	D5	C716	E26	CA48	D41	CV11	B3	D715	D25	L111	A35	Q361	C12	QS61	E38	R361	E3	R702	E25	R930	C15	RA70	B51	RR01	B13	SR81	A18
C337	D5	C717	E26	CA61	D50	CV13	C2	D720	C26	L112	A35	Q402	E8	QS62	E39	R368	C12	R709	D25	R932	D14	RA71	B49	RR02	B13	SR81	B17
C360	C12	C718	D28	CA68	B54	CV29	B7	D721	D25	L113	B35	Q403	C23	QS63	D39	R369	C12	R710	A26	R934	D14	RA72	B49	RR03	B13	T401	E9
C403	D2	C719	D27	CA68	C24	CV31	B7	D801	A19	L114	B36	Q404	E9	QS64	E39	R401	D4	R713	D25	R935	D14	RA73	B50	RR04	B13	T461	D11
C404	D2	C720	E28	CA69	B55	CV36	C3	D830	E21	L301	D8	Q421	D21	QV01	B3	R403	D2	R715	C27	R936	D29	RA74	B51	RR05	B12	T461	D19
C407	D2	C721	E27	CA69	C24	CV38	A38	D840	C19	L400	C24	Q460	E5	QV01	B37	R405	E1	R716	B27	R937	B15	RA80	B49	RR06	B12	T801	A18
C410	C23	C726	C25	CB01	A49	CV39	A38	D845	B17	L441	D10	Q461	E4	QV01	B8	R407	D1	R717	B27	R939	D15	RA81	B49	RR07	A10	T840	C18
C413	E8	C801	A17	CB60	C49	CV41	B2	D862	B21	L442	D10	Q471	E14	QV02	B37	R408	C23	R720	C28	R942	A31	RA82	B49	RR08	B11	T862	A22
C415	E2	C802	A18	CB61	C49	CV45	B36	D864	A21	L461	E5	Q472	E14	QV14	A38	R410	E6	R722	A27	R943	C31	RB01	B53	RR93	B11	V901	C32
C416	E9	C805	B19	CB62	C50	CV46	B36	D873	B21	L462	D10	Q480	C52	QV60	A4	R411	E6	R723	A27	R944	B31	RB03	B54	RS02	E37	W661	C44
C417	E8	C806	A19	CB63	C50	CV47	B36	D875	B21	L501	C12	Q501	B11	QY10	A41	R413	E8	R724	A27	R960	B31	RB09	A49	RS04	E37	W662	B44
C421	D22	C810	B19	CD80	D42	CV48	A36	D876	A21	L502	E21	Q501	D2	QY11	A42	R415	E8	R725	A27	R961	C31	RB11	B53	RS08	D37	X	E13
C430	C24	C811	B18	CG60	E41	CV49	A36	D881	B19	L702	D27	Q610	B43	QY12	B42	R416	E9	R730	D26	R962	B31	RB21	C2	RS10	E37	X401	D4
C431	C24	C812	A18	CG61	E41	CV60	A4	D882	C19	L704	D27	Q611	C42	QY13	B42	R418	C23	R731	B24	R977	B15	RB22	C2	RS14	D37	X501	C12
C439	E10	C813	B18	CG62	E42	CV61	A5	D883	A22	L705	D27	Q612	D54	QZ01	B5	R424	D20	R732	D26	R980	D14	RB23	C3	RS16	D37	XA01	E51
C440	E11	C819	C54	CG63	E42	CZ01	B5	D884	B22	L805	B19	Q613	C43	QZ02	B7	R425	D20	R733	D27	R981	D15	RB24	D50	RS40	C37	XM01	C46
C442	D10	C832	E22	CG65	D23	CZ02	B6	D885	C22	L806	A19	Q706	A27	QZ03	B7	R430	E12	R734	E26	R982	D15	RB25	D49	RS42	C37		
C444	E10	C840	C19	CG66	D23	CZ03	B5	D886	B22	L861	A20	Q707	A27	QZ04	B4	R431	E14	R735	D27	R983	D15	RB30	C54	RS60	D38		
C445	E12	C842	C24	CG67	E42	CZ04	B6	D898	B20	L862	B21	Q709	C26	R	E13	R432	E15	R736	D27	R984	D16	RB40	A52	RS61	D38		
C446	D21	C843	D23	CG68	D42	CZ05	B6	D899	A17	L883	A22	Q710	E26	R101	B23	R433	C4	R737	D26	R985	D16	RB41	A53	RS62	E38		
C448	A24	C860	B20	CG69	E43	CZ07	B5	D901	D29	L884	B22	Q711	D27	R102	A56	R441	D10	R738	D27	R986	D16	RB42	A52	RS63	E38		
C449	D22	C861	C21	CG70	D43	CZ08	B5	D902	D14	L885	A23	Q712	E27	R151	B33	R448	D20	R739	E27	R987	D16	RB43	D52	RS64	D39		

IC FUNCTIONS

Q840
L78MR05

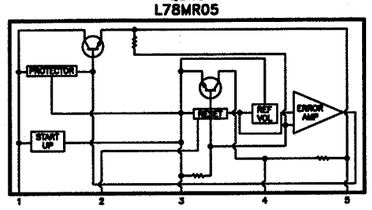

Q301
TA8427K

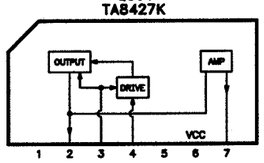

Important Parts Information

- The parts listed here are those not usually available from a well-stocked supply cabinet or bin.
- Where items may be replaced with equivalent parts, several alternates are shown from participating vendors.
- On the parts lists, safety items are marked with a # to remind you that only exact replacements are recommended for these items.
- When ordering parts, state the model number, part number, and description.

Obtaining Parts

Many of these parts are available from your local Sams authorized distributor or the manufacturer of the equipment. Call Sams for the name of your nearest distributor:

800-428-7267

Or consult the Sams *Annual Index* for the address of the original equipment manufacturer.

Participating Vendors

Information on test equipment and replacement parts is listed in these pages for the following participating vendors. Consult the Sams *Annual Index* for their current address.

- Philips ECG Company (ECG)
- Sencore, Inc.
- Terrell & Nobis (TNI Electronics)

PARTS LIST

SEMICONDUCTORS

(Select the replacement that gives the best results.)

Item No.	Type No.	Mfr. Part No.	ECG Part No.
D101	HTZ33-12	-	-
D201	1SS133	23118859	ECG519
	1SS120-7	-	-
D221 Thru			
D224	1SS133	23118859	ECG519
	1SS120-7	-	-
D252, 53	MTZJ9.1A	23316686	-
	RD9.1E5AB1	-	-
D301, 02	EU2A	-	ECG552
	ERB44-06	23118095	ECG552
D308, 09	ERB12-02	23118822	ECG125
D310, 13	1SS133	23118859	ECG519
	1SS120-7	-	-
D316 (1)	MTZJ5.6C	23316673	-
	RD5.6ESA63	-	-
D316 (2)	MTZJ6.8C	23316679	-
D406	EU2A	23118094	ECG552
D408	3JH41	A7580658	-
	RU4ZLF-L1	-	ECG580
D409	MTZJ10B	23316690	-
	RD10ESAB2	-	-
D411	MTZJ8.2B	23316684	-
	RD8.2ESAB2	-	-
D421	MTZJ4.7A	23316665	-
	RD4.7ESAB1	-	-
D422	MTZJ5.1B	23316669	ECG5010T1
	RD5.1ESAB2	-	ECG5010T1
D430	MTZJ12C	23316720	ECG5021T1
	RD12ESAB3	-	-
D441	MTZJ9.1B	23316687	-
	RD9.1ESAB2	-	-
D461	ERC20-06	23316582	ECG598
D464	MTZJ2.2A	23316648	-
	RD2.2ESAB1	-	-
D466 (2)	MTZJ2.7B	23316653	-
D467, 71	ERB44-06	23118095	ECG552
	EU2A	-	ECG552
# **D472**	RD6.2E(4)	23115774	ECG5013A
D473	1SS133	23118859	ECG519
	1SS120-7	-	-
D480	MTZJ36A	23316757	-
	RD36ESAB1	-	-
D611, 12	1SS133	23118859	ECG519
	1SS120-7	-	-
D704, 05 (1)	1SS133	23118859	ECG519
	1SS120-7	-	-
D715 (1)	1SS133	23118859	ECG519
	1SS120-7	-	-
D720, 21 (1)	1SS133	23118859	ECG519
	1SS120-7	-	-
D801	D3SB60	23316391	ECG5310
D830	MTZJ5.6C	23316673	-
	RD5.6ESAB3	-	-
D840	S1WBA20	23316962	ECG5332
	S1WBA60	-	ECG5332
D845	1SS133	23118859	ECG519
	1SS120-7	-	-
D862, 64	EU2A	23118094	ECG552
D873, 75	MTZJ12B	23316719	ECG5021T1
	RD12ESAB2	-	-
D876	MTZJ39A	23316761	-
	RD39ESAB1	-	-
D881	1SS133	23118859	ECG519
	1SS120-7	-	-
# **D882**	MTZJ13A	23316721	-
	MTZJ13A	-	-
D883, 84	EL1	23357021	-
D885, 86	EU2A	23118094	ECG552

 # For SAFETY use only equivalent replacement part
(1) Used in model CN32V71.
(2) Used in model CN27V71.

PARTS LIST continued

SEMICONDUCTORS continued

(Select the replacement that gives the best results.)

Item No.	Type No.	Mfr. Part No.	ECG Part No.
D898	MTZJ27B	23316746	ECG5021T1
	RD27ESAB2	-	-
D901 Thru			
D906	1SS133	23118859	ECG519
	1SS120-7	-	-
D911	ERB44-06	23118095	ECG552
DA06	1SS133	23118859	ECG519
	1SS120-7	-	-
DA27	MTZJ5.6B	23316672	ECG5011T1
	RD5.6ESAB2	-	ECG5011A
DB01 (2)	SCL003URC3FX	23358504	-
DB03	SIR-56SB3F	23358522	-
DB30, 45	1SS133	23118859	ECG519
	1SS120-7	-	-
DE50 (1)	SCL003URC5F	23358501	-
DM01	MTZJ6.2B	23316675	ECG5013T1
DV01, 03, 05	MTZJ9.1A	23316686	-
	RD9.1ESAB1	-	-
DV13, 45	MTZJ9.1A	23316686	-
	RD9.1ESAB1	-	-
G317 (2)	1SS133	23118859	ECG519
Q151	2SA933S-Q	23114530	ECG290A
	2SA564A-Q,TH	-	ECG290A
	2SA1015Y	-	ECG290A
Q152	2SC1740S-Q	23114528	ECG85
	2SC1685-Q,TH	-	ECG85
	2SC1815Y	-	ECG85
Q201 (1)	2SC1740S-Q	23114528	ECG85
	2SC1685-Q,TH	-	ECG85
	2SC1815Y	-	ECG85
Q202, 03	2SC1740S-Q	23114528	ECG85
	2SC1685-Q,TH	-	ECG85
	2SC1815Y	-	ECG85
Q204, 05	RN1204	A6002040	ECG2359
Q301	TA8427K	B0378560	-
Q361	2SC4721-Q	23314445	-
	2SC2655-Y(C)	-	ECG2363
Q402	2SC2482FA-1	A6330069	ECG399
Q403	2SC4721P	23314444	-
	2SC2655-Y(C)	-	ECG2363
Q404	2SD2553	A6873777	-
	2SD2553(FA)	-	-
Q421	2SC3852	23314141	ECG56%
	2SD1944H	-	-
	2SD1405BL	-	-
Q460	2SD2493(D)	23314938	-
	2SD2493(P)	-	-
Q461	2SA933S-Q	23114530	ECG290A
	2SA564A-Q,TH	-	ECG290A
	2SA1015Y	-	ECG290A
Q471	2SA1015-0	A6534020	ECG290A
	2SA1015-Y	-	ECG290A
Q472	2SC1740S-Q	23114528	ECG85
	2SC1815-Y	-	ECG85
	2SC1685-Q,TH	-	ECG85
Q480	2SA949-Y(C)	A6532853	ECG383
Q501	TA1310AN	-	-
Q610	TA8211AH	B0376856	ECG7070
Q611	2SC2878-A	A6342200	ECG85
Q612	2SA933S-Q	-	ECG290A
	2SA564A-Q,TH	-	ECG290A
	KTA1266Y	23314962	ECG290A
Q613	2SC2878-A	A6342200	ECG85
Q706, 07, 09 (1)	2SC1740S-Q	23114528	ECG85
	2SC1685-Q,TH	-	ECG85
	2SC1815Y	-	ECG85
Q710 (1)	2SA933S-Q	23114530	ECG290A
	2SA564A-Q	-	ECG290A
	2SA1015Y	-	ECG290A

% Use Insulating hardware supplied with replacement.
(1) Used in model CN32V71.
(2) Used in model CN27V71.

SEMICONDUCTORS continued

(Select the replacement that gives the best results.)

Item No.	Type No.	Mfr. Part No.	ECG Part No.
Q711 (1)	2SB1569A	23314911	-
	2SB1569E	-	-
Q712 (1)	2SD2400A	23314914	-
	2SD2400E	-	-
Q719, 20 (1)	2SC1740S-Q	23114528	ECG85
	2SC1685-Q,TH	-	ECG85
	2SC1815Y	-	ECG85
Q801	STR-Z4214	23906369	-
Q817	2SC1740S-Q	23114528	ECG85
	2SC1685-Q,TH	-	ECG85
	2SC1815Y	-	ECG85
Q818	RN2201	A6012010	ECG2368
Q819	2SC1740S-Q	23114528	ECG85
	2SC1685-Q,TH	-	ECG85
	2SC1815Y	-	ECG85
Q830	2SC3852	23314141	ECG56%
	2SD1944H	-	-
	2SD1405BL	-	-
Q840	L78MR05	23318299	-
Q843	RN1205	A6002050	-
Q862	TLP621(GRL)	A8643135	ECG3098
# **Q883**	S1854(FA4)	A6907894	-
Q901	2SC4544	A6368700	ECG376%
Q902	2SC1740S-Q	23114528	ECG85
	2SC1685-Q,TH	-	ECG85
	2SC1815-Y	-	ECG85
Q903	2SC4544	A6368700	ECG376%
Q904	2SC1740S-Q	23114528	ECG85
	2SC1685-Q,TH	-	ECG85
	2SC1815-Y	-	ECG85
Q905	2SC4544	A6368700	ECG376%
Q906	2SC1740S-Q	23114528	ECG85
	2SC1685-Q,TH	-	ECG85
	2SC1815-Y	-	ECG85
Q907	2SA933S-Q	23114530	ECG290A
	2SA564A-Q,TH	-	ECG290A
	2SA1015Y	-	ECG290A
Q908	2SC2120-Y	A6321240	ECG289A
Q910, 11	2SC1740S-Q	23114528	ECG85
	2SC1685-Q,TH	-	ECG85
	2SC1815-Y	-	ECG85
Q912, 13	2SA933S-Q	23114530	ECG290A
	2SA564A-Q,TH	-	ECG290A
	2SA1015Y	-	ECG290A
Q914	2SC1740S-Q	23114528	ECG85
	2SC1685-Q,TH	-	ECG85
	2SC1815-Y	-	ECG85
QA01 (1)	M37274EF-053	23906949	-
QA01 (2)	M37274EF-052	23906893	-
QA02	AT24C04-10PC	-	-
	24LC04BI/P	23905036	-
QA03	2SC1740S-Q	23114528	ECG85
	2SC1685-Q,TH	-	ECG85
	2SC1815Y	-	ECG85
QB01	2SC1740S-Q	23114528	ECG85
	2SC1685-Q,TH	-	ECG85
	2SC1815Y	-	ECG85
QB03	RN1205	A6002050	-
QB22	2SC752(G)TM-Y	A6734590	ECG85
QB23	2SC1740S-Q	23114528	ECG85
	2SC1685-Q,TH	-	ECG85
	2SC1815-Y	-	ECG85
QB30	2SC1740S-Q	23114528	ECG85
	2SC1685-Q,TH	-	ECG85
	2SC1815-Y	-	ECG85
QB40, 41	2SC1740S-Q	23114528	ECG85
	2SC1685-Q,TH	-	ECG85
	2SC1815-Y	-	ECG85

 # For SAFETY use only equivalent replacement part
% Use Insulating hardware supplied with replacement.
(1) Used in model CN32V71.
(2) Used in model CN27V71.

SEMICONDUCTORS continued

(Select the replacement that gives the best results.)

Item No.	Type No.	Mfr. Part No.	ECG Part No.
QB60	2SA933S-Q	23114530	ECG290A
	2SA564A-Q,TH	-	ECG290A
	2SA1015Y	-	ECG290A
QB61	2SC1740S-Q	23114528	ECG85
	2SC1685-Q,TH	-	ECG85
	2SC1815-Y	-	ECG85
QD80	2SA933S-Q	23114530	ECG290A
	2SA564A-Q,TH	-	ECG290A
	2SA1015Y	-	ECG290A
QG60 (1)	BA4558	23906596	ECG778A
QG61 (1)	UPC1406HA	23119228	ECG1792
QM01	TMPA8700CHN	-	-
QM02	2SA933S-Q	23114530	ECG290A
	2SA564A-Q,TH	-	ECG290A
	2SA1015Y	-	ECG290A
QM03	PST523D	70119743	-
QS60, 61	2SC1740S-Q	23114528	ECG85
	2SC1685-Q,TH	-	ECG85
	2SC1815Y	-	ECG85
	KTC3198Y	23314965	ECG199
QS62	RN2204	A6012040	ECG2360
QS63, 64	2SC2878-A	A6342200	ECG85
QV01	MM1313BD	23906364	-
QV02	MM1111XS	23904943	-
QV14	2SA933S-Q	23114530	ECG290A
	2SA564A-Q,TH	-	ECG290A
	2SA1015Y	-	ECG290A
QV60	2SC1740S-Q	23114528	ECG85
	2SC1685-Q,TH	-	ECG85
	2SC1815-Y	-	ECG85
QY10, 11 (1)	2SC1740S-Q	23114528	ECG85
	2SC1685-Q,TH	-	ECG85
	2SC1815Y	-	ECG85
QY12 (1)	RN1204	A6002040	ECG2359
QY13 (1)	2SC1740S-Q	23114528	ECG85
	2SC1685-Q,TH	-	ECG85
	2SC1815Y	-	ECG85
QZ01	TC90A45P	B0410867	-
QZ02, 03, 04	2SC1740S-Q	23114528	ECG85
	2SC1685-Q,TH	-	ECG85
	2SC1815Y	-	ECG85

(1) Used in model CN32V71.

PARTS LIST continued

CONTROLS & RESISTORS

	Item No.	Function/Rating	Mfr. Part No.
	D899	Varistor	24019471
	R368	4.7 5% 1/4W Fusible	24545479
	R416	4300 5W Wirewound	24510432
	R424	.82 5% 1/2W Fusible	24546828
	R441	1000 5% 1W Fusible	24532102
#	**R475** (1)	390 5% 1/6W	24366391
#	**R475** (2)	560 5% 1/6W	24366561
#	**R478**	13K 1% 1/4W	24327133
#	**R482** (1)	4700 1% 1/4W	24327472
#	**R482** (2)	5600 1% 1/4W	24327562
	R488, 89	18K 1% 1/4W	24327183
	R808	7 Cold PTC/223 Cold	24019002
	R810	.82 10% 10W Wirewound	24569828
	R889	.39 5% 1/2W Fusible	24546398
	R920 (1)	5.1 5% 1W Fusible	24000880
	R920 (2)	1.8 5% 2W Fusible	24000945
	R984	1500 2% 1/6W	24367152
	R985	470 2% 1/6W	24367471
	R986, 87	680 2% 1/6W	24367681
	R988, 89	4700 2% 1/6W	24367472
	R991	680 2% 1/6W	24367681

 # For SAFETY use only equivalent replacement part.
(1) Used in model CN32V71.
(2) Used in model CN27V71.

CAPACITORS & ELECTROLYTICS

	Item No.	Rating	Mfr. Part No.
	C305 (1)	2.2µF 10% 50V	24617912
	C305 (2)	1µF 10% 50V	24617915
	C327	1µF 10% 50V	24617915
#	**C440**	.0078 3% 1.5kV	24082958
#	**C442** (1)	.39 5% 315V	24082920
#	**C442** (2)	.3 5% 315V	24082917
#	**C444** (1)	.0062 3% 1.8kV	24082611
#	**C444** (2)	.0056 3% 1.8kV	24082610
#	**C467**	.018 3% 630V	24095881
	C505	12pF 5% 50V NPO	24353120
	C801	.22 20% 125VAC	24095670
	C802	.082 20% 125VAC	24095852
	C805, 06	.01 +80% -20% 250VAC	24092623
	C811, 12	.0047 20% 250VAC	24092585
	C813	.01 20% 250VAC	24092586
	C865, 71	.0015 10% 2kV	24092347
	C893, 94	100pF 10% 2kV	24092333
	C902	.001 10% 2kV	24092345
	CB60	2.2µF 20% 50V NP	24085944
	CG67	10µF 20% 16V NP	24085981
	CM70	10µF 20% 16V NP	24085981

 # For SAFETY use only equivalent replacement part.
(1) Used in model CN32V71.
(2) Used in model CN27V71.

COILS & TRANSFORMERS

	Item No.	Function/Rating	Mfr. Part No.
	G104	-	23289470
	G463	Ferrite Bead	23103880
	G500	-	23289840
	G890, 91	-	23280016
	G908	-	23289100
	L105	-	23289220
	L111, 12	-	23238562
	L113, 14	-	23289220
	L301	Ferrite Bead	23103880
	L400	-	23238714
#	**L441** (1)	Horizontal Linearity	23233941
#	**L441** (2)	Horizontal Linearity	23233971
	L442	-	23248122
#	**L461**	-	23248115
	L462 (1)(3)	Yoke Horiz 1.3mH Vert 18.3mH	-
	L462 (2)(3)	Yoke Horiz 1mH Vert 16.5mH	-
	L501, 02	-	23289844
	L702 (1)	-	23261974
	L704, 05 (1)	Ferrite Bead	23103859
	L805, 06	-	23248227
	L861, 62	Ferrite Bead	23103880
	L883, 84	Ferrite Bead	23103880
	L885	-	23248073
	L886, 88	Ferrite Bead	23103880
	L901 (1)	Degaussing	23200631
	L901 (2)	Degaussing	23200664
	L902, 03, 04	-	23289221
	L910	-	23237991
	LA01	-	23289100
	LB01	Oscillator	23262261
	LM02	-	23289840
	LM18	-	23289100
	LV01	-	23289840
	LV45	-	23289840
	LV98, 99	Filter	23103852
	LZ01	-	23238708
	LZ02	Ferrite Bead	23103880
	LZ03	-	23238714
	LZ04	Ferrite Bead	23103880
	LZ05	-	23289840
	LZ11	-	23289836
	T401	Horizontal Drive	23224367
#	**T461** (4)	Horizontal Output	23236540
	T801	Line Filter	23211708
	T840	Power	23213513
	T862	Converter	23217379

 # For SAFETY use only equivalent replacement part.
(1) Used in model CN32V71.
(2) Used in model CN27V71.
(3) Bonded part of CRT.
(4) Screen and focus controls are part of T461.

MISCELLANEOUS

	Item No.	Description	Mfr. Part No.	Notes
	F301	Fuse	23144908	.5A, 125V, Fast Acting
	F470	Fuse	23144731	1.6Amp, 125V, Fast Acting
	F801	Fuse	23144888	5Amp, 125V Fast Acting
	F860	Fuse	23144511	4Amp, 125V
	H001 (1)	Main Tuner	23321332	UHF/VHF, ELA22LX2
	H002	Module	23148271	IF/MTS, MVUS33A
	H003	RF Switch	23344420	RSU133X5
	HY01 (1)	PIP Tuner	23321327	UHF/VHF, EL934L3
	KB01 (2)	Receiver	23906805	Remote, PIC-TB17
	KB01 (3)	Receiver	23904946	Remote, RPM-676CBR-S
	P801	Line Cord	23372070	AC, Polarized
	PV01	Jack	23365818	SVHS
	PV02	Jack	23365948	Assembly
	PV03	Jack	23365949	Assembly
	SA01	Switch	23145227	Channel Up
	SA02	Switch	23145227	Channel Down
	SA03	Switch	23145227	Volume Up
	SA04	Switch	23145227	Volume Down
	SA05	Switch	23145227	Video
	SA06	Switch	23145227	Menu
	SA07 (2)	Switch	23145227	Power
	SA07 (3)	Switch	23145226	Power
	SR81	Relay	23146564	Power
#	V901 (2)	CRT	23312690	A81AGZ50X01V
#	V901 (3)	CRT	23312778	A68KSA30X12D
	V901A	Socket	23902068	CRT
	W661, 62 (2)	Speaker	23351088	2 1/4" X 5", 8 Ohms, 5W
	W661, 62 (3)	Speaker	23351086	-
	X401	Crystal	23153721	503kHz
	X501	Crystal	23153961	3.58MHz
	XA01	Crystal	23153504	8MHz
	XM01	Resonator	23153325	8MHz
	ZY01	Module	23148292	PIP
		Module	23148353	PIP
		Fuse Holder	23165433	For F301, F470, and F801 (6 used)
		PC Board (2)	PB8681A	CRT
		PC Board (3)	PB8642C	CRT
		PC Board (2)	PB8643B	Main
		PC Board (3)	PB8643D	Main
		PC Board (3)	PB8644C-2	RMT/LED
		PC Board (2)	PB8644B-1	TIF/MW
		PC Board (3)	PB8644C-1	TIF/MW
		PC Board (2)	PB8688B	V-Chip
		PC Board (3)	PB8688A	V-Chip
		Transmitter (2)	23306268	Remote
		Transmitter (3)	23306263	Remote

 # For SAFETY use only equivalent replacement part.
(1) Contact TNI Electronics for replacement; order by manufacturer's part number.
(2) Used in model CN32V71.
(3) Used in model CN27V71.

CABINET PARTS

Item	Mfr. Part No.
Model CN27V71	
Button Control	23443998
Button Power	23443992
Cabinet Front	23510255
Cabinet Rear	23426460
Catch Push	23451204
Door	23427261
Mark	23432984
Model CN32V71	
Button Control	23445179
Cabinet Front	23510438
Cabinet Rear	23427247
Filter Remote	23430428
Transmitter	
Battery Cover	23588181

TEST EQUIPMENT

Test equipment listed by participating manufacturer illustrates typical or equivalent equipment used by Sams engineers to obtain measurements. This equipment is compatible with most types used by field service technicians.

Equipment	Sencore No.	Equipment	Sencore No.
Oscilloscope	SC3100	Isolation Transformer	PR570
Generators		Capacitance Analyzer	LC102
RGB	CM2125	CRT Analyzer	CR7000
Multiburst Signal	VG91	AC Leakage Tester	PR570
Color Bar	VG91	Inductance Analyzer	LC102
TV Stereo	VG91	Flyback Yoke Tester	TVA92
Digital VOM	SC3100	Field Strength Meter	SL753
Frequency Meter	SC3100	Transistor Tester	TF46
Hi-Voltage Probe	HP200	Horizontal Analyzer	HA-2500
Accessory Probes	TP212	Video Analyzer	VG91, TVA92